Visit digikey.com

COILTRONICS®

High Frequency Inductors for Core Power Applications

The trend in modern power conversion is for high power density, reduced volume and increased efficiency. The drive for smaller, more efficient solutions presents a number of challenges for circuit design and component selection.

Inductor selection in high current core power applications is based on a need for high peak current ratings and low high frequency losses. These two requirements lead designers in different directions resulting in a compromise solution. Designers are forced to select low inductance values to reduce inductor size (and ensure fast transient responses which results in high ripple currents needing to be absorbed by the inductor increasing losses) or select higher inductance values to reduce the ripple current and losses - but at a sacrifice of inductor size, efficiency and transient responses.

The material of choice for core power multi-phase uncoupled inductors is ferrite. Core power applications require a high saturation, high frequency, low loss, wide temperature range ferrite material to be selected. The reduced core loss at high frequency (coupled with a very low Direct Current Resistance - DCR - single turn rectangular conductor) ensures high efficiency (see Figure 1).

Figure 1 -Typical Three-Phase Voltage Regulator Module (VRM)

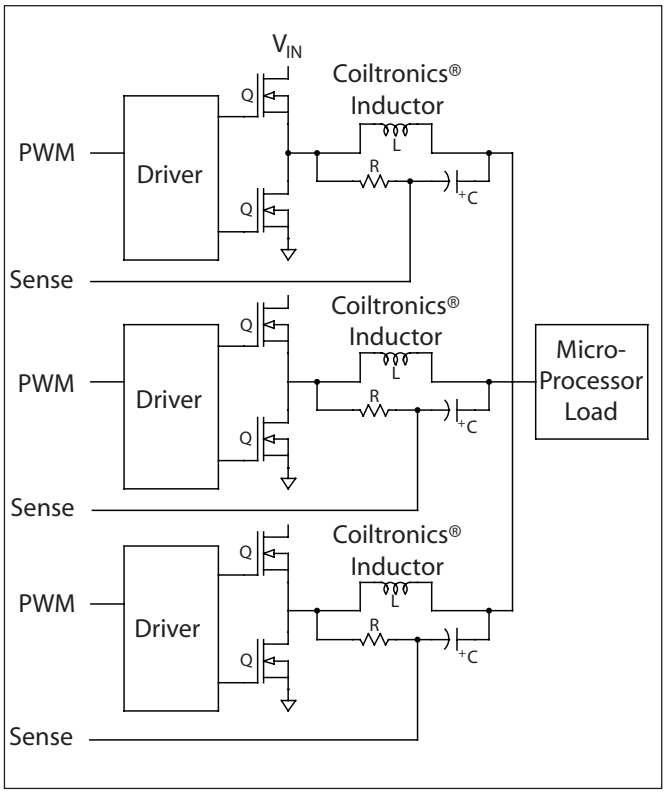

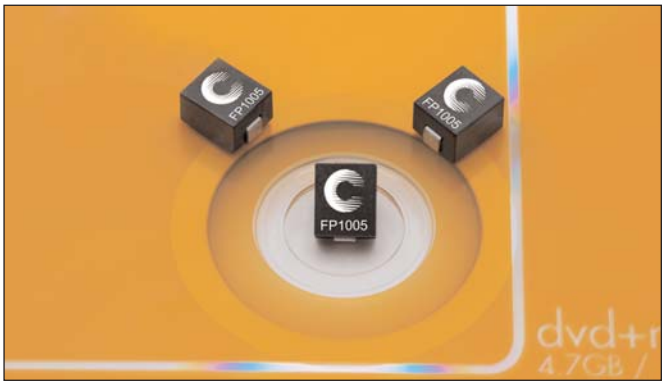

Current Sensing

When accurate current sensing is required, a low value resistor is commonly used to generate a voltage proportional to the output current. The introduction of such a current sense resistor increases the circuit losses along with overall converter size and cost. Using an output inductor with a tight DCR tolerance will eliminate the need for the current sense resistor.

Figure 2 – Inductor current sensing circuit

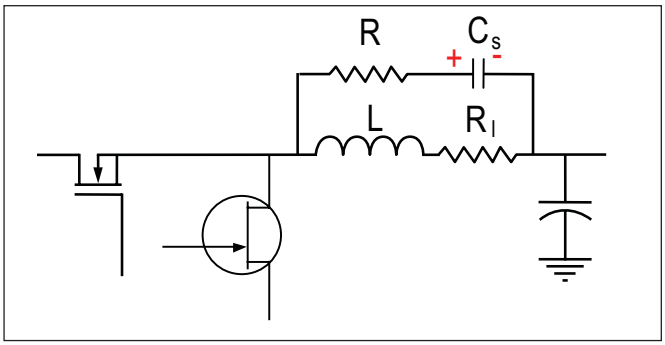

Figure 2 shows a typical inductor current sense circuit, where the voltage across C_S is equal to the volt drop across the inductor DCR when the RC time constant is equal to the inductor time constant ($R*C=L/R_l$). The low DC resistance at tight tolerance enables the inductor to also function as a current sensor (DCR Sensing). The Cooper Bussmann Coiltronics® Flat-Pac™ Series of inductors offers the largest variety of sizes, ratings, DCR options and stands out as the industry leader in multi-phase uncoupled core power applications.

Comparing the performance of traditional ferrite inductors (such as the FP2 with the new DCR current sense inductors from Cooper Bussmann) it can be seen that the benefits go beyond the elimination of sensing resistors.

From Table 1 it can be seen that in addition to offering three different DCR values and tolerances the FP0705 has better performance over the traditional FP2 inductor. The FP0705 also has greater core loss stability over a wide temperature range, which is a consideration that is often overlooked during converter design. Almost all inductor specifications show room temperature values. However, the effects of increased temperature need to be accounted for as peak current ratings are reduced and losses increased at elevated temperatures.

The Cooper Bussmann Coiltronics® Flat-Pac™ Series of DCR current sensing inductors is available in footprints of 7 x 7mm, 7 x 8mm, 10 x 7mm, 10 x 8mm and 11 x 8mm with many inductance value ranges and DCR tolerances. All parts exhibit low DCR, high peak current ratings and very low high frequency core losses that remain stable over a wide temperature range. The Flat-Pac™ inductors are also RoHS compliant and Halogen Free. The combination of these characteristics make the new Flat-Pac™ inductors ideal for high frequency, high efficiency voltage regulation modules used in computer core power applications.

See Table 2 for a detail reference of the new core power inductor solutions available from Cooper Bussmann.

Table 1 – DCR Current Sense Inductor Performance

Coiltronics Part No.	Core Material	Nominal Inductance	I_{rms} (A)[1]	I_{pk} (A)[2]	DCR (mΩ)	Core Loss (mW)[3]	Height (mm)
FP2-V150-R	Ferrite	150nH	37	23	0.28	50	5
FP0705R1-R15-R	Ferrite	150nH	43	30	0.25 ± 10%	10	5
FP0705R2-R15-R	Ferrite	150nH	38	30	0.32 ± 9.4%	10	5
FP0705R3-R15-R	Ferrite	150nH	32	30	0.46 ± 6.5%	10	5

1. DC current for an approximate ΔT of 40°C
2. Peak current for approximately 20% roll off at 25°C
3. Losses at 500kHz, applied volt-second of 0.75V-µs

Table 2 - High Frequency Inductor Selection Matrix

Inductor Series	Coiltronics Part Number	Dimension (mm)	OCL (nH)	I_{sat}(A)@ 25°C	I_{sat}(A)@ 125°C	I_{rms}(A) xx[1] = R1	I_{rms}(A) xx[1] = R2	I_{rms}(A) xx[1] = R3	DCR(mΩ) xx[1] = R1	DCR(mΩ) xx[1] = R2	DCR(mΩ) xx[1] = R3
FP0705	FP0705xx-R07-R	7 x 7 x 4.95	72	65	50	43	38	32	0.25±10%	0.32±9.4%	0.46±6.5%
	FP0705xx-R10-R	7 x 7 x 4.95	105	44	36	43	38	32	0.25±10%	0.32±9.4%	0.46±6.5%
	FP0705xx-R12-R	7 x 7 x 4.95	120	37	30	43	38	32	0.25±10%	0.32±9.4%	0.46±6.5%
	FP0705xx-R15-R	7 x 7 x 4.95	150	30	24	43	38	32	0.25±10%	0.32±9.4%	0.46±6.5%
	FP0705xx-R18-R	7 x 7 x 4.95	180	25	20	43	38	32	0.25±10%	0.32±9.4%	0.46±6.5%
	FP0705xx-R22-R	7 x 7 x 4.95	220	20	16	43	38	32	0.25±10%	0.32±9.4%	0.46±6.5%
FP0708	FP0708xx-R07-R	8.5 x 7.0 x 7.2	72	90	72	44	-	-	0.35±8.6%	-	-
	FP0708xx-R09-R	8.5 x 7.0 x 7.2	90	75	60	44	-	-	0.35±8.6%	-	-
	FP0708xx-R10-R	8.5 x 7.0 x 7.2	105	68	54	44	-	-	0.35±8.6%	-	-
	FP0708xx-R12-R	8.5 x 7.0 x 7.2	120	59	47	44	-	-	0.35±8.6%	-	-
	FP0708xx-R15-R	8.5 x 7.0 x 7.2	150	47	37	44	-	-	0.35±8.6%	-	-
	FP0708xx-R19-R	8.5 x 7.0 x 7.2	190	37	29	44	-	-	0.35±8.6%	-	-
FP0805	FP0805xx-R03-R	7.49 x 7.62 x 4.96	32	110	95	65	-	-	0.17±17%	-	-
	FP0805xx-R06-R	7.49 x 7.62 x 4.96	58	83	61	65	-	-	0.17±17%	-	-
	FP0805xx-R07-R	7.49 x 7.62 x 4.96	72	67	49	65	-	-	0.17±17%	-	-
	FP0805xx-R10-R	7.49 x 7.62 x 4.96	100	50	35	65	-	-	0.17±17%	-	-
	FP0805xx-R20-R	7.49 x 7.62 x 4.96	200	20	16	65	-	-	0.17±17%	-	-
FP0807	FP0807xx-R07-R	7.4 x 7.6 x 7.0	70	108	79	49	-	-	0.50±6%	-	-
	FP0807xx-R10-R	7.4 x 7.6 x 7.0	100	77	55	49	-	-	0.50±6%	-	-
	FP0807xx-R12-R	7.4 x 7.6 x 7.0	120	66	48	49	-	-	0.50±6%	-	-
	FP0807xx-R16-R	7.4 x 7.6 x 7.0	160	48	36	49	-	-	0.50±6%	-	-
	FP0807xx-R18-R	7.4 x 7.6 x 7.0	180	42	32	49	-	-	0.50±6%	-	-
	FP0807xx-R20-R	7.4 x 7.6 x 7.0	200	38	28	49	-	-	0.50±6%	-	-
	FP0807xx-R22-R	7.4 x 7.6 x 7.0	220	35	25	49	-	-	0.50±6%	-	-

1. DCR Indicator.

Visit digikey.com

COOPER Bussmann

Table 2 - High Frequency Inductor Selection Matrix (Continued)

Inductor Series	Coiltronics Part Number	Dimension (mm)	OCL (nH)	I_{sat}(A) @ 25°C	I_{sat}(A) @ 125°C	I_{rms}(A) xx[1] = R1	I_{rms}(A) xx[1] = R2	I_{rms}(A) xx[1] = R3	DCR(mΩ) xx[1] = R1	DCR(mΩ) xx[1] = R2	DCR(mΩ) xx[1] = R3
FP1105	FP1105xx-R10-R	8 x 11 x 4.9	100	81	63	46	-	-	0.35 ± 8.6%	-	-
	FP1105xx-R12-R	8 x 11 x 4.9	120	66	50	46	-	-	0.35 ± 8.6%	-	-
	FP1105xx-R15-R	8 x 11 x 4.9	150	54	42	46	-	-	0.35 ± 8.6%	-	-
	FP1105xx-R20-R	8 x 11 x 4.9	192	42	34	46	-	-	0.35 ± 8.6%	-	-
	FP1105xx-R22-R	8 x 11 x 4.9	226	39	28	46	-	-	0.35 ± 8.6%	-	-
FP1107	FP1107xx-R07-R	7.2 x 11 x 7.2	70	140	123	55	42	-	0.29 ± 10.0%	0.47 ± 6.4%	-
	FP1107xx-R12-R	7.2 x 11 x 7.2	120	90	72	55	42	-	0.29 ± 10.0%	0.47 ± 6.4%	-
	FP1107xx-R15-R	7.2 x 11 x 7.2	150	70	56	55	42	-	0.29 ± 10.0%	0.47 ± 6.4%	-
	FP1107xx-R23-R	7.2 x 11 x 7.2	230	45	36	55	42	-	0.29 ± 10.0%	0.47 ± 6.4%	-
	FP1107xx-R30-R	7.2 x 11 x 7.2	300	35	28	55	42	-	0.29 ± 10.0%	0.47 ± 6.4%	-
	FP1107xx-R40-R	7.2 x 11 x 7.2	400	25	20	55	42	-	0.29 ± 10.0%	0.47 ± 6.4%	-
	FP1107xx-R51-R	7.2 x 11 x 7.2	510	18	14.5	55	42	-	0.29 ± 10.0%	0.47 ± 6.4%	-
FP1005	FP1005xx-R08-R	7 x 10.2 x 4.95	85	90	64	53	50	45	0.39±7.7%	0.47±6.7%	0.55±5.4%
	FP1005xx-R10-R	7 x 10.2 x 4.95	100	73	57	53	50	45	0.39±7.7%	0.47±6.7%	0.55±5.4%
	FP1005xx-R12-R	7 x 10.2 x 4.95	120	60	48	53	50	45	0.39±7.7%	0.47±6.7%	0.55±5.4%
	FP1005xx-R15-R	7 x 10.2 x 4.95	150	47	37	53	50	45	0.39±7.7%	0.47±6.7%	0.55±5.4%
	FP1005xx-R22-R	7 x 10.2 x 4.95	220	33	26	53	50	45	0.39±7.7%	0.47±6.7%	0.55±5.4%
FP1006	FP1006xx-R08-R	8 x 10.2 x 6	85	100	70	53	45	-	0.27 ± 12%	0.36 ± 8.6%	-
	FP1006xx-R10-R	8 x 10.2 x 6	100	85	64	53	45	-	0.27 ± 12%	0.36 ± 8.6%	-
	FP1006xx-R12-R	8 x 10.2 x 6	120	71	53	53	45	-	0.27 ± 12%	0.36 ± 8.6%	-
	FP1006xx-R16-R	8 x 10.2 x 6	160	55	40	53	45	-	0.27 ± 12%	0.36 ± 8.6%	-
	FP1006xx-R22-R	8 x 10.2 x 6	220	38	28	53	45	-	0.27 ± 12%	0.36 ± 8.6%	-
FP1007	FP1007xx-R12-R	10.41 x 8 x 7.0	120	81	65	60	51	-	0.29 ±10%	0.48 ±8%	-
	FP1007xx-R14-R	10.41 x 8 x 7.0	140	72	56	60	51	-	0.29 ±10%	0.48 ±8%	-
	FP1007xx-R17-R	10.41 x 8 x 7.0	170	58	46	60	51	-	0.29 ±10%	0.48 ±8%	-
	FP1007xx-R22-R	10.41 x 8 x 7.0	215	50	36	60	51	-	0.29 ±10%	0.48 ±8%	-
	FP1007xx-R30-R	10.41 x 8 x 7.0	300	32	26	60	51	-	0.29 ±10%	0.48 ±8%	-

1. DCR Indicator.

The Cooper Bussmann Coiltronics® brand of magnetics specializes in standard and custom solutions, offering the latest in state-of-the-art low-profile high power density magnetic components. We remain at the forefront of innovation and new technology to deliver the optimal mix of packaging, high efficiency and unbeatable reliability. Our designs utilize high frequency, low core loss materials, and new and custom core shapes in combination with innovative construction and packaging to provide designers with the highest performance parts available on the market. The Coiltronics Brand product line of power magnetics continually expands to satisfy shifts in technology and related market needs. Standard Product Categories include:

- Shielded Drum Inductors
- Unshielded Drum Inductors
- High Current Inductors
- Toroidal Inductors
- Specialty Magnetics
- Custom Magnetics

Please visit http://www.cooperbussmann.com/datasheets/elx to see data sheets on the wide variety of inductor solutions we have to offer.

For techncial inquiries e-mail InductorTech@cooperindustries.com.

Order samples online - www.cooperbussmann.com

© 2008 Cooper Bussmann
St. Louis, MO 63178
636-394-2877
www.cooperbussmann.com

COILTRONICS® COOPER Bussmann® PowerStor®

COOPER Bussmann